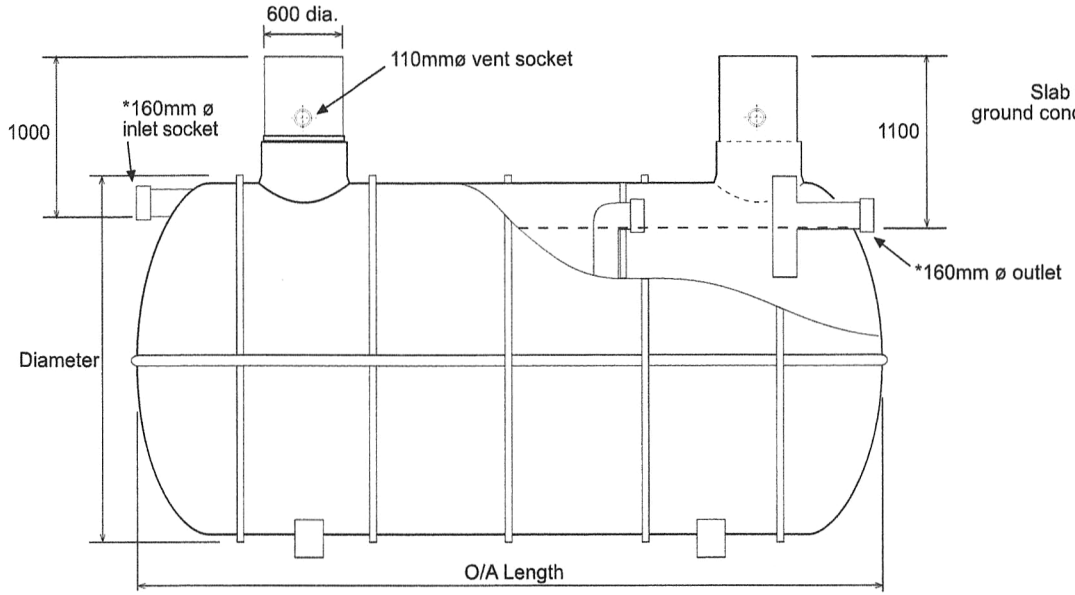

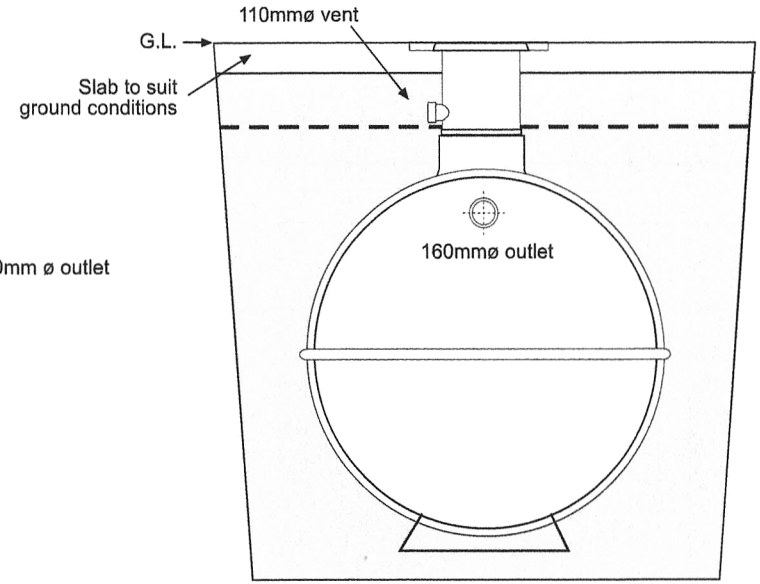

INSTALLATION NOTES:-

Standard units are suitable for installation to a maximum depth of 1 metre. Heavy duty units are also available.

Capacity Litres	Diameter mm	O/A Length mm
2,800	1250	2750
3,800	1250	3500
4,500	1500	2750
6,000	1850	3300
7,500	1850	3800
9,000	1850	4250
12,000	1850	5500
18,000	2600*	4100
22,500	2600*	5100
27,500	2600*	6100
36,000	2600*	7800
45,000	2600*	9600
54,000	2600*	11,500

* 110mmø inlet/outlet on 2,800 - 12,000L incl.
160mm ø inlet/outlet on 18,000 - 54,000L Incl.

Other designs are available

Synergy WASTEWATER TREATMENT PRODUCTS
Croom, Enmore Road, Enmore, Bridgwater, Somerset. TA5 2AN
Tel: 01278 671927 Fax: 01278 671963 E-mail: info@synergy-wtp.co.uk
Web: www.synergy-wtp.co.uk

Drawing Title:
Cylindrical Septic Tanks
Two stage Horizontal Flow
2,800 litre to 54,000 litre

All dimensions are in mm | Scale: NTS

Revision Details:

Drawing No.
SD902 Rev

Date:
Nov 2011

Drawn by:

© 2009 This drawing is copyright and may not be reproduced or used without written permission of Synergy Wastewater Treatment Products. Synergy Wastewater Treatment Products reserve the right to change specifications without notice